A PERSONAL MESSAGE FROM TEAM SKYBOUND

When I shop, I am not just buying a product or service. I purchase why that brand focuses on what they do, what their corporate philosophy is, the quality of their products, and whether or not my personal core values align with that brand's vision. When I don't feel great about a company's brand, products, or how I'm being treated as a customer, then I know they are not delivering on what matters most: exceeding the customer expectation by delivering happiness with their products, quality, and service.

This primary focus is what drives our culture at Team Skybound. For supporting our vision, we would like to personally thank you for trusting us to deliver happiness to you and your family!

Team SkyBound

"Nurturing the inner-child in all of us by uniting communities worldwide and promoting an active lifestyle."

For customer service, please contact:

888-891-4689
Monday through Friday
8:00 am to 5:00 pm PST
or visit www.SkyBoundUSA.com

skybound

help@skyboundusa.com

skybound

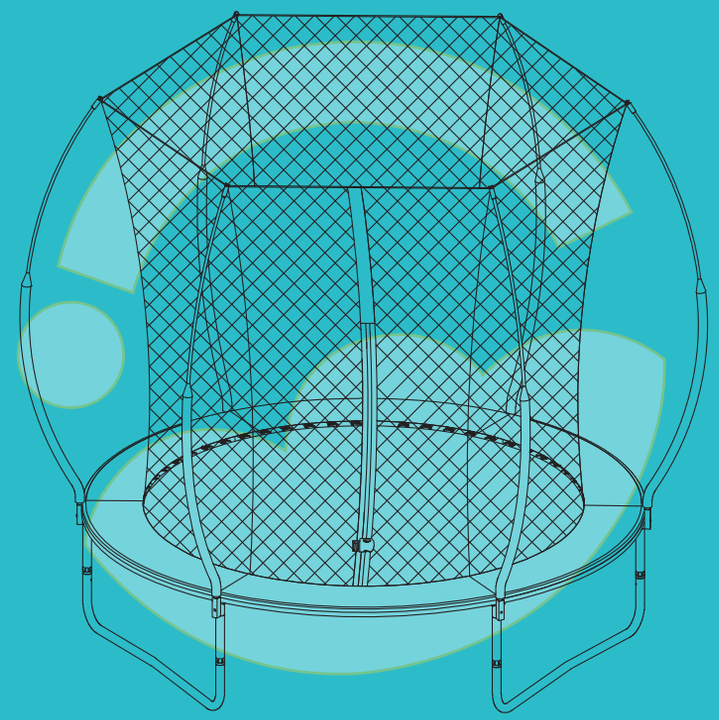

6ft/8ft Trampoline

WITH ENCLOSURE NET (CURVED POLE STYLE)

ASSEMBLY AND INSTALLATION MANUAL

www.SkyBoundUSA.com

©2023 BX International Inc – ALL RIGHTS RESERVED

IMPORTANT INFORMATION

Prior to using the trampoline, you must read all the instructions contained in this manual. All information, including the warnings instructions for care, maintenance, and use of the trampoline are intended to promote safe, enjoyable use of the trampoline.

⚠ WARNING - GENERAL

- Overhead clearance is essential. A minimum of 24 feet of overhead clearance from ground level is required.
- Provide clearance for wires, tree limbs, and other possible hazards.
- Lateral clearance is essential. Place the trampoline away from walls, fences, structures, and other play areas. Maintain a clear space on all sides of the trampoline.
- Place the trampoline on a stable level surface before use.
- The area under the trampoline surface should be free and clear of any objects or obstructions.
- Use the trampoline in a well-lit area. Artificial illumination may be required for indoor or shady areas.
- Secure the trampoline against unauthorized and unsupervised use.
- Remove any obstructions from beneath the trampoline.
- The owner and supervisors of the trampoline are responsible for all users to be aware of the practices specified in the use instructions.
- This product is not intended for use by children under 6 years of age. Restrict usage to one person at any time. Maximum weight limit is 6ft: 220 Lbs (100 kgs) / 8ft: 264 Lbs (120 kgs).
- Prior to each use, inspect the trampoline for any worn, defective, misadjusted or missing parts. Ensure the frame padding is correctly and securely positioned.

⚠ WARNING - USAGE

- DO NOT attempt or allow somersaults. Landing on the head or neck can cause serious injury, paralysis, or death, even when landing on the middle of the bed.
- Do not allow more than one person on the trampoline. Use by more than one person at the same time can result in serious injury.
- Use trampoline only with mature, knowledgeable supervision at all times.
- Inspect the trampoline before each use. Make sure the frame padding is correctly and securely positioned. Replace any worn, defective, or missing parts.
- Climb on and off the trampoline. It is a dangerous practice to jump from the trampoline to the floor or ground when dismounting, or to jump onto the trampoline when mounting. Do not use the trampoline as a springboard to other objects.
- Stop bounce by flexing knees as feet come in contact with the trampoline bed. Learn this skill before attempting others.
- Learn fundamental bounces and body positions thoroughly before trying more advanced skills. A variety of trampoline activities can be carried out by performing the base fundamentals in various series and combinations, performing one fundamental after another, with or without feet bounces between them.
- Avoid bouncing too high. Stay low until bounce control and repeated landing in the center of the trampoline can be accomplished. Control is more important than height.
- While keeping the head erect, focus eyes on the trampoline toward the perimeter. This will help control bounce.
- Avoid bouncing when tired. Keep turns short.
- Properly secure the trampoline when not in use. Protect it against unauthorized use.
- Keep objects away that could interfere with the performer. Maintain a clear area around the trampoline.

⚠ WARNING - USAGE

- For additional information concerning trampoline equipment, contact SkyBound (www.SkyBoundUSA.com); help@skyboundusa.com
- For information concerning skill training, contact a certified trampoline instructor.
- Bounce only when the surface of the bed is dry. Wind or air movement should be calm to gentle. The trampoline must not be used in gusty or severe winds.
- Read all instructions before using the trampoline. Warning and instructions for the care, maintenance, and use of this trampoline are included to promote safe, enjoyable use of the equipment.
- Remove any sharp or loose objects from pockets or on your body prior to use, including such as glasses, watches, jewelry, chains, ornaments, clasps and other sharp objects.
- Ensure the trampoline and surrounding areas are properly illuminated.
- Do not put any objects on, under or around the trampoline.
- Shoes should not be worn while jumping on the trampoline. Jumpers should be barefoot, or wearing socks or gymnastics shoes.
- Serious injury can occur from misuse or abuse of the trampoline. Bounce in the center of the bed.

CARE, MAINTENANCE AND USE INTRUCTIONS MUST BE READ CAREFULLY PRIOR TO USING THE TRAMPOLINE!

This Trampoline is constructed of high quality materials and craftmanship. For years of exercise, fun and enjoyment and to reduce the risk of injury to the user, follow all required care and maintenance instructions closely listed below:

- Only one jumper should use the trampoline at any time.
- Do not allow pets on the trampoline in order to help prevent cuts, scrapes, tears or other types of damage to the mat or pad.
- Inspect the trampoline before each use and replace any worn, defective, or missing parts. Any number of issues can raise the risk of injury.
- The following conditions could represent potential hazards:

1. Missing, improperly positioned, or insecurely attached frame padding
2. Punctures, frays, tears, or holes worn in the bed or frame padding
3. Deterioration in the stitching or fabric of the bed or frame padding
4. Ruptured springs
5. A bent or broken frame
6. A sagging mat
7. Sharp protrusions on the frame or suspension system

IF ANY OF THE PREVIOUS CONDITIONS ARE FOUND, OR ANY OTHER ISSUES YOU FEEL MAY BE HARMFUL TO THE USER, THE TRAMPOLINE SHOULD BE IMMEDIATELY DISASSEMBLED OR SECURED FROM ANY FUTURE USE UNTIL THE ISSUE(S) HAVE BEEN RESOLVED.

You must check all the parts of the trampoline including the frame, suspension system, mat , pad, and enclosure at regular intervals. If these checks are not carried out, the trampoline could become dangerous. It is of particular importance that these be followed at the beginning of each season, as well as at regular intervals during the usage season.

- Check all nuts and bolts for tightness and tighten as required.
- Check all coverings for bolts and sharp edges and replace when necessary.
- Check for evidence of wear and tear or deterioration and damage. Replace any parts as needed.

HIGH WIND ADVISORY
Please keep in mind, this trampoline can be blown around by high winds.
During times of high winds, the trampoline should be moved indoors to a sheltered location.

6FT ASSEMBLY PARTS

ACCESSORIES LIST 1

This object is subject to wear and tear. No warranties whether expressed or implied are provided.
Injury will likely occur with the use of a trampoline or any associated product.
Use with supervision.Use at your own risk.
Only Use in a well-lit, well secured down area.

Please reference this list of parts for assembly of the trampoline.

Prior to constructing, make sure all parts listed here are accounted for.

NO.	Part Name	Pictures	Quantity
A	Large Top Rail		3
B	Small Top Rail		3
C	Safety Net	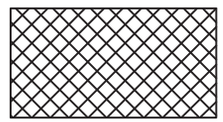	1
D	W-Shaped Leg Base		3
E	Upper Net Pole		6
F	Lower Net Pole		6
G	Spring Tool		1
H	Socket Wrench		1
I	Elastic Rope		48

6FT ASSEMBLY PARTS

ACCESSORIES LIST 2

NO.	Part Name	Pictures	Quantity
J	Waterproof Plug		6
K	Round Head Bolts		6
L	Washer		6
M	Nut		6
N	Spring Pad Cover	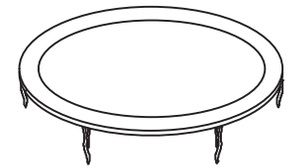	1
O	Jumping Mat	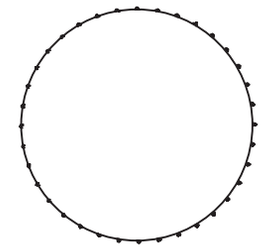	1

6FT ASSEMBLY INSTRUCTIONS

It is highly recommended for two or more people to assemble the trampoline. This package contains small parts which are a choking hazard and may have sharp edges and points. Keep all parts away from children until fully assembled.

STEP 1

Layout Parts A, B, & D as shown in the figure.

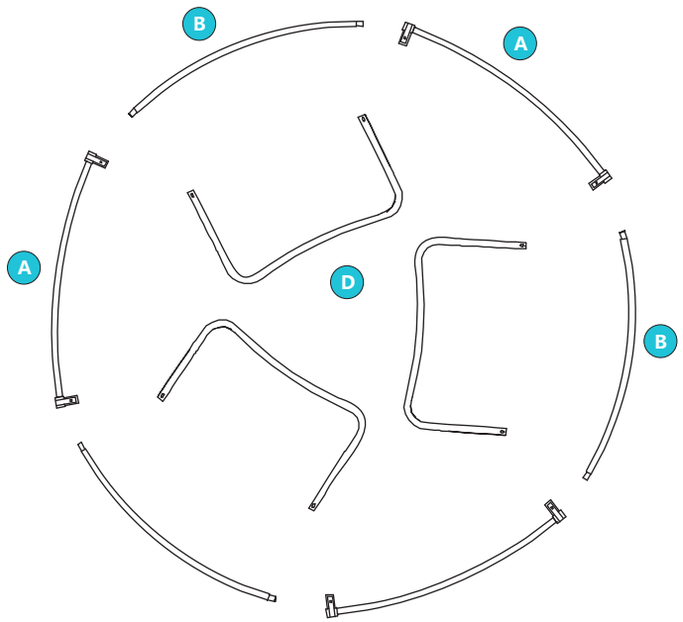

6FT ASSEMBLY INSTRUCTIONS

STEP 2

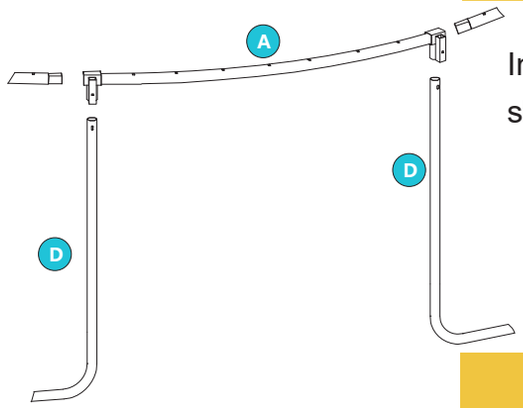

Install Part D to part A as shown in the figure below.

STEP 3

Upon completion should look like figure below

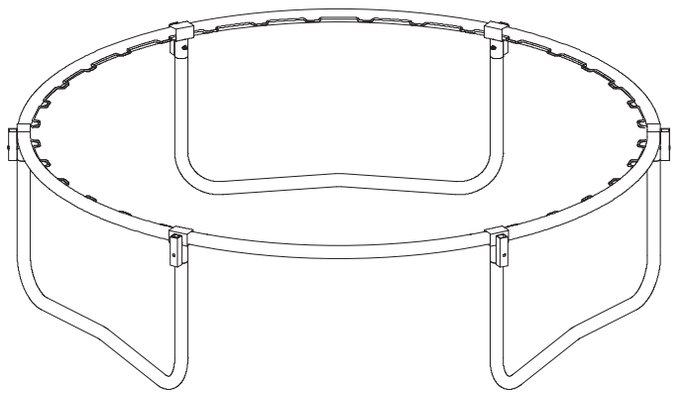

⚠ WARNING

Do not lift or move trampoline during installation!

Doing so may warp the frame making the rest of the installation process difficult.

STEP 4

Install Part O using Part G. Please follow installation diagram to install elastic rope properly to frame of trampoline.

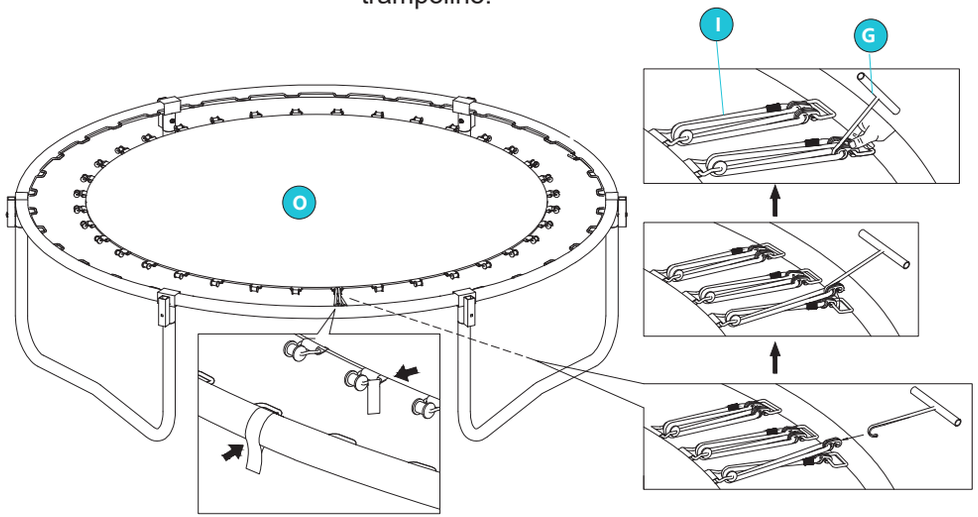

WARNING

When installing the first elastic rope, it is important to pay attention to the ring with a yellow label on the jump cloth, which must be connected to the elastic rope hole with a yellow label on the coil tube.

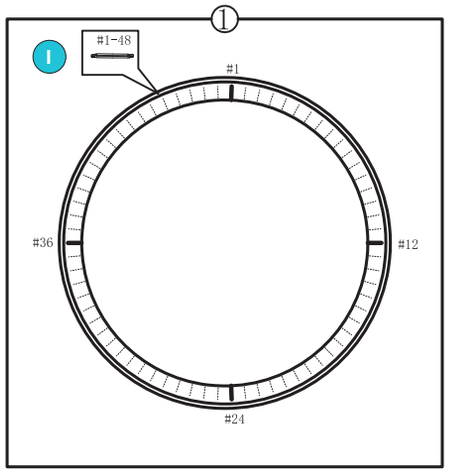

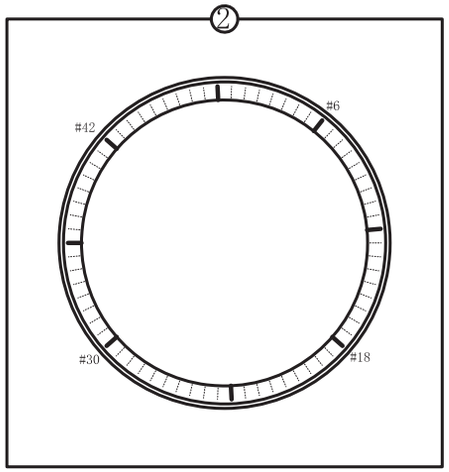

6FT ASSEMBLY INSTRUCTIONS

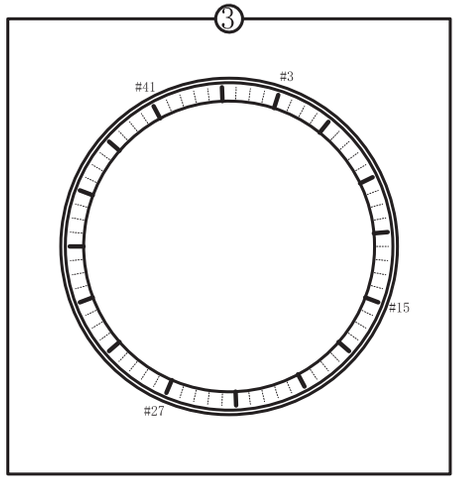

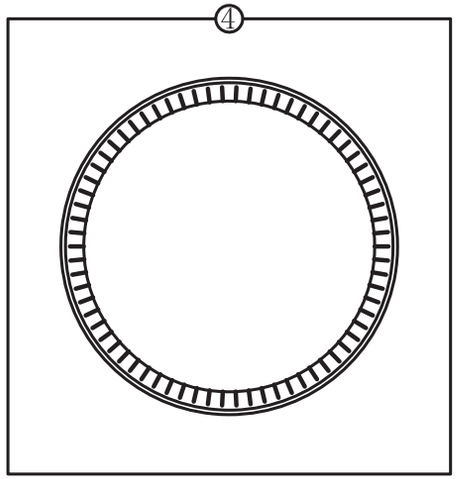

Complete installation drawing of spring

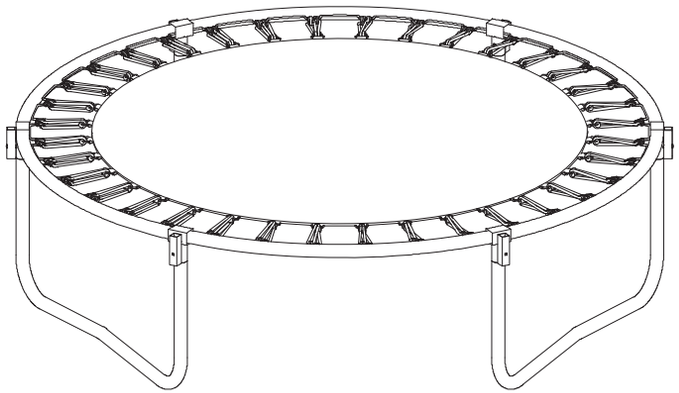

It is highly recommended for two or more people to assemble the trampoline. This package contains small parts which are a choking hazard and may have sharp edges and points. Keep all parts away from children until fully assembled.

It is highly recommended for two or more people to assemble the trampoline. This package contains small parts which are a choking hazard and may have sharp edges and points. Keep all parts away from children until fully assembled.

STEP 5

Install spring pad cover and secure attached straps to top rail of trampoline as shown in figure.

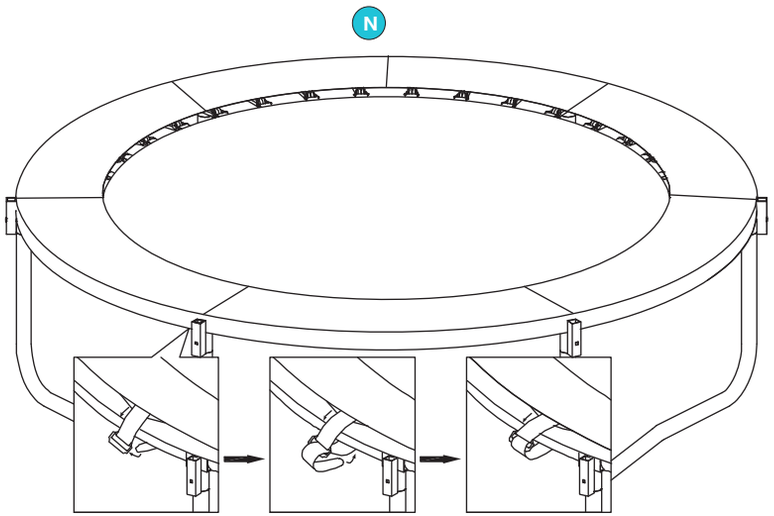

STEP 6

Install and secure the trampoline Poles as shown in the figure below.

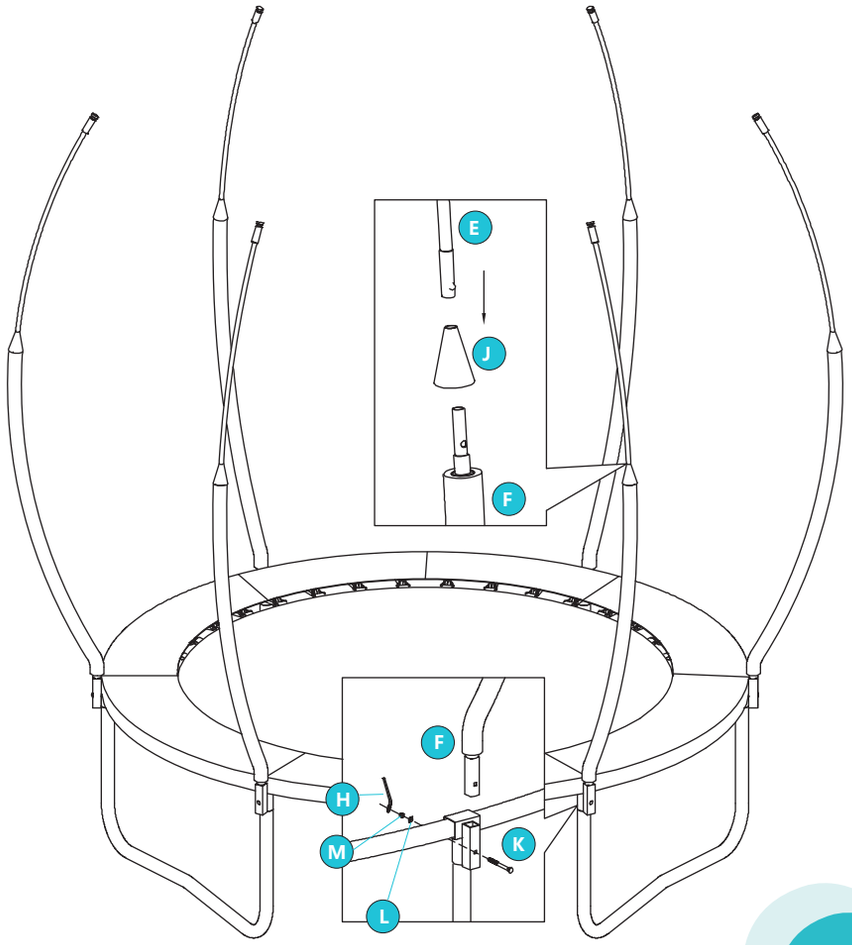

STEP 7

Install the protective net as shown in the following figure.

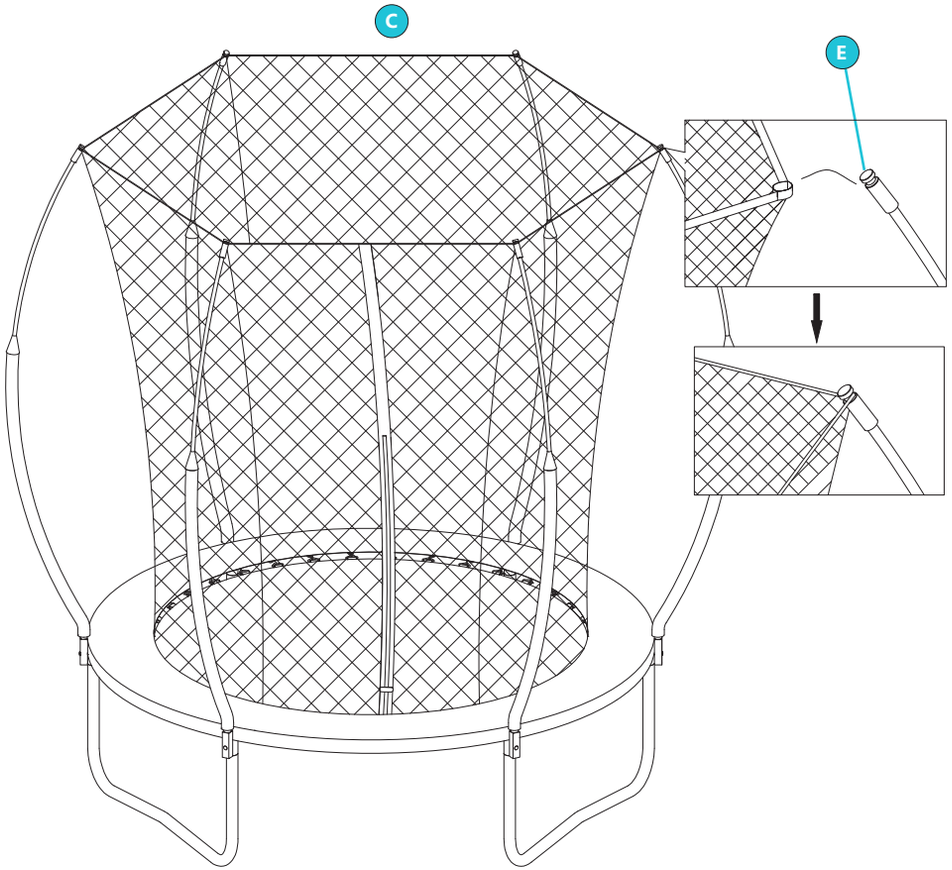

6FT ASSEMBLY INSTRUCTIONS

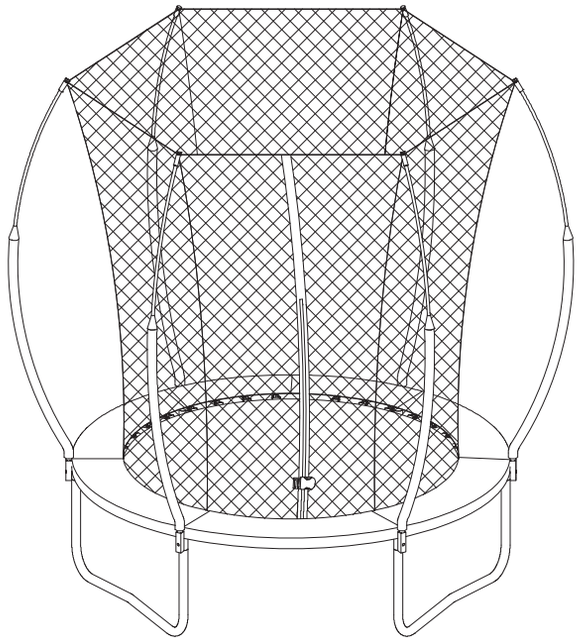

6ft Trampoline

Installation completion drawing

SkyBoundUSA.com

(888) 891-4689

SkyBound Customer Service

help@skyboundusa.com

skybound

SkyBound, a BX International Inc Company.
SkyBound is a registered trademark of BX International Inc. in the U.S. and other countries. All logos, names, characters, likenesses, images, slogans and packaging appearance are the property of SkyBound.

8FT ASSEMBLY PARTS

ACCESSORIES LIST 1

This object is subject to wear and tear. No warranties whether expressed or implied are provided.
Injury will likely occur with the use of a trampoline or any associated product.
Use with supervision.Use at your own risk.
Only Use in a well-lit, well secured down area.

Please reference this list of parts for assembly of the trampoline.

Prior to constructing, make sure all parts listed here are accounted for.

NO.	Part Name	Pictures	Quantity
A	Large Top Rail		3
B	Small Top Rail		3
C	Vertical Leg		6
D	W-Shaped Leg Base		3
E	Upper Net Pole		6
F	Lower Net Pole		6
G	Spring Tool		1
H	Socket Wrench		1
I	Elastic Rope		60

8FT ASSEMBLY PARTS

ACCESSORIES LIST 2

NO.	Part Name	Pictures	Quantity
J	Waterproof Plug		6
K	Round Head Bolts		6
L	Washer		6
M	Nut		6
N	Spring Pad Cover	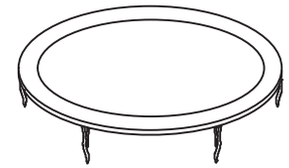	1
O	Jumping Mat	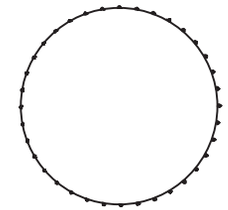	1
P	Safety Net	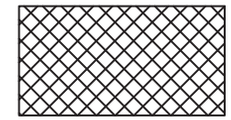	1

8FT ASSEMBLY INSTRUCTIONS

It is highly recommended for two or more people to assemble the trampoline. This package contains small parts which are a choking hazard and may have sharp edges and points. Keep all parts away from children until fully assembled.

STEP 1

Layout Parts A, B, C, & D as shown in the figure.

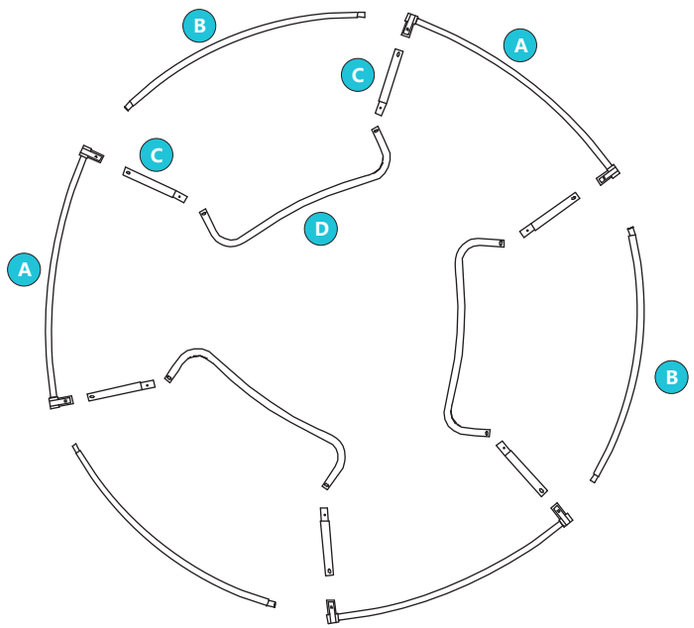

8FT ASSEMBLY INSTRUCTIONS

STEP 2

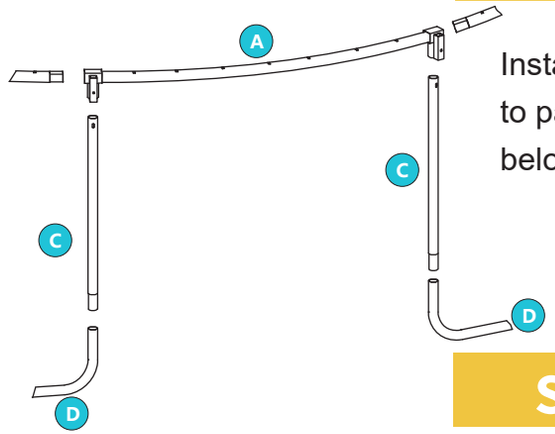

Install Part C along with Part D to part A as shown in the figure below.

STEP 3

Upon completion should look like figure below

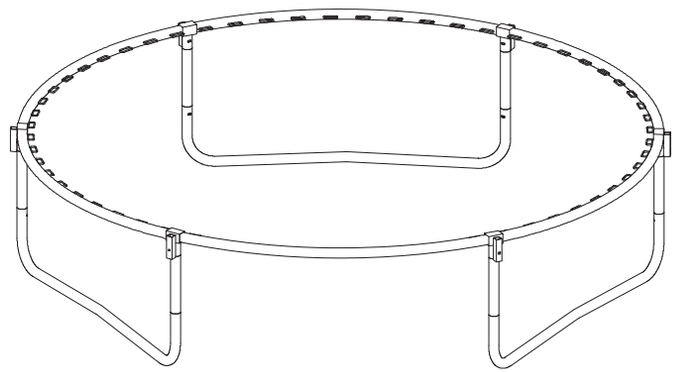

⚠ WARNING

Do not lift or move trampoline during installation!

Doing so may warp the frame making the rest of the installation process difficult.

STEP 4

Install Part O using Part G. Please follow installation diagram to install elastic rope properly to frame of trampoline.

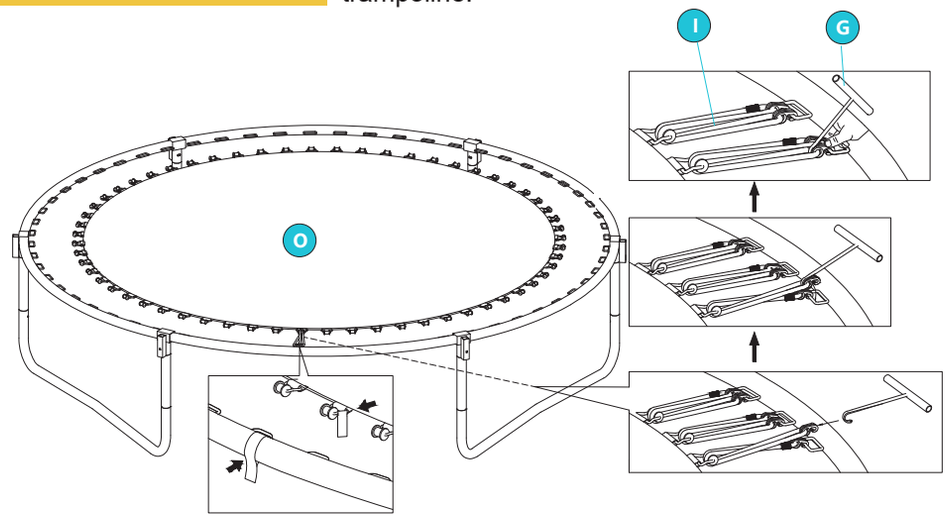

WARNING

When installing the first elastic rope, it is important to pay attention to the ring with a yellow label on the jump cloth, which must be connected to the elastic rope hole with a yellow label on the coil tube.

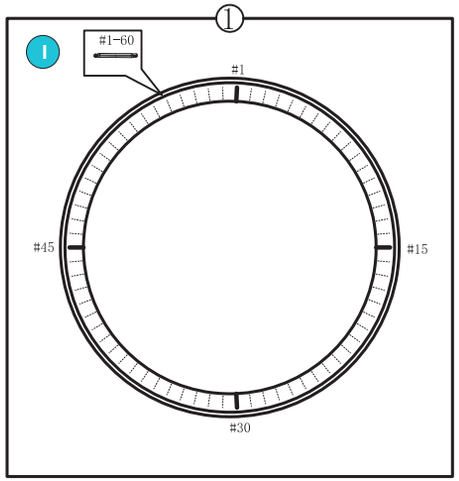

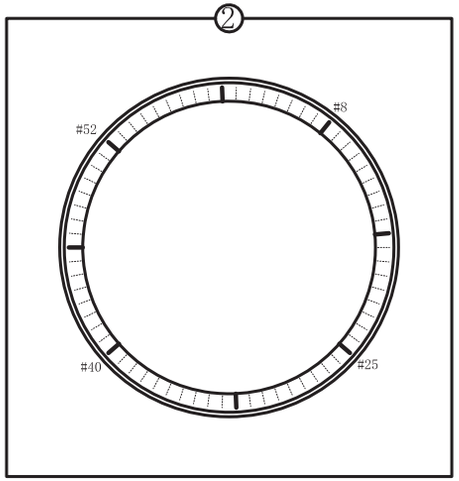

8FT ASSEMBLY INSTRUCTIONS

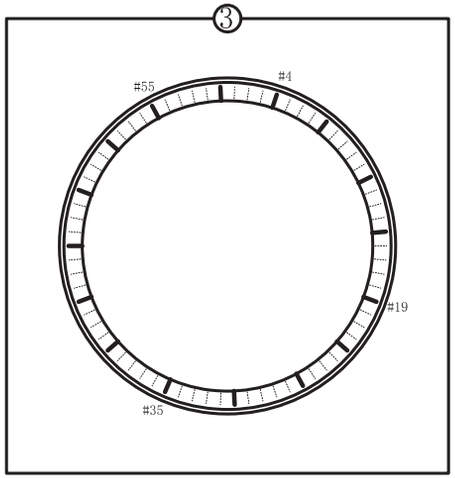

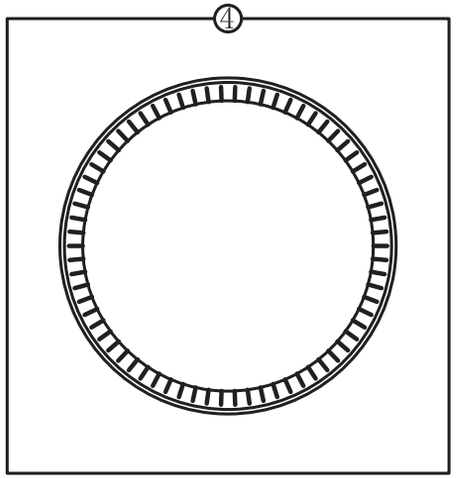

Complete installation drawing of spring

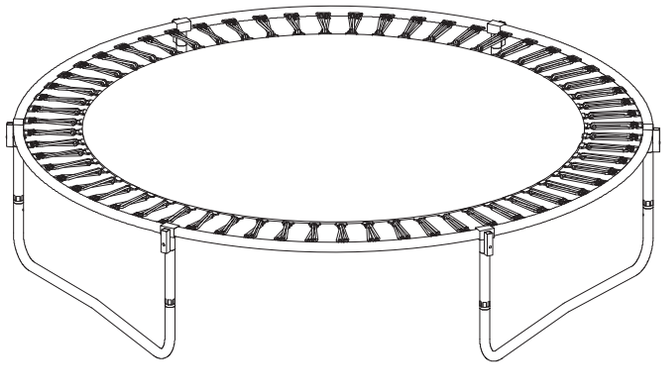

It is highly recommended for two or more people to assemble the trampoline. This package contains small parts which are a choking hazard and may have sharp edges and points. Keep all parts away from children until fully assembled.

It is highly recommended for two or more people to assemble the trampoline. This package contains small parts which are a choking hazard and may have sharp edges and points. Keep all parts away from children until fully assembled.

STEP 5

Install spring pad cover and secure attached straps to top rail of trampoline as shown in figure.

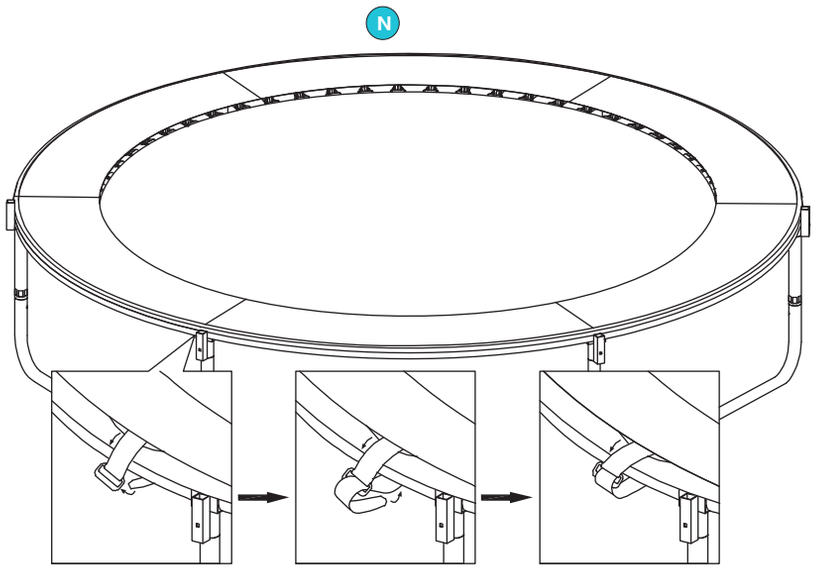

8FT ASSEMBLY INSTRUCTIONS

STEP 6

Install and secure the trampoline Poles as shown in the figure below.

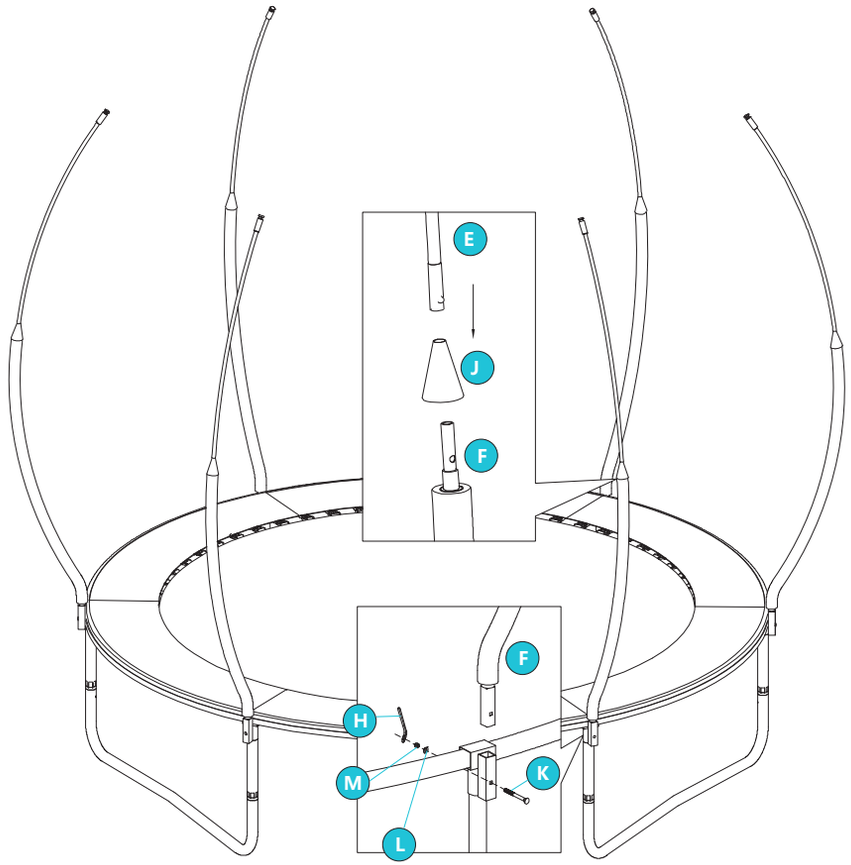

STEP 7

Install the protective net as shown in the following figure.

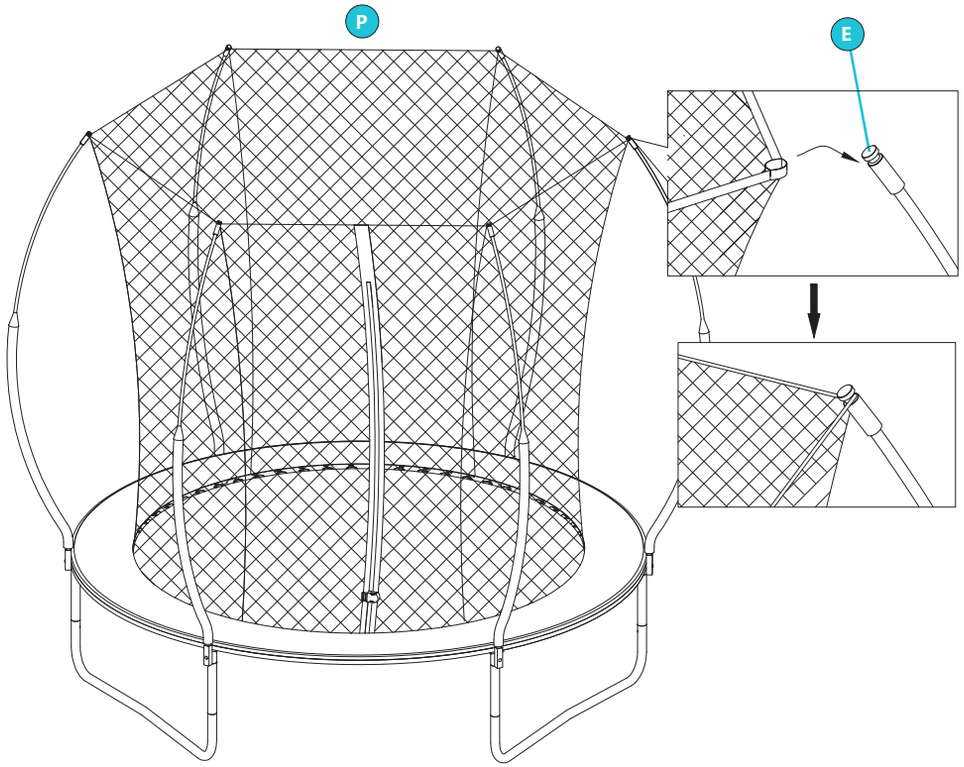

8FT ASSEMBLY INSTRUCTIONS

8ft Trampoline

Installation completion drawing

SkyBoundUSA.com

(888) 891-4689

SkyBound Customer Service
help@skyboundusa.com

skybound

SkyBound, a BX International Inc Company.
SkyBound is a registered trademark of BX International Inc. in the U.S. and other countries. All logos, names, characters, likenesses, images, slogans and packaging appearance are the property of SkyBound.

FUNDAMENTAL SKILLS

STANDARD JUMP

1. Start from standing position, with head up and eyes on the trampoline pad.

2. Swing arms up and forward in a circular motion.

3. While mid-air, bring feet closer together and point downward.

4. Keep feet shoulder width while landing.

KNEE DROP

1. Start from a Standard Jump.

2. Land on knees while keeping your body erect and back straight.

3. Bounce back up into a Standard Jump.

SEATED DROP

1. Start from a Standard Jump.

2. Land in a sitting position with legs stretched out and hands on mat without locking elbows.

3. Push yourself back into a Standard Jump using your hands.

FLAT DROP

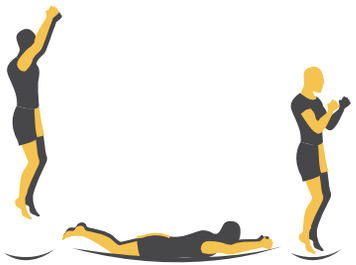

1. Start with a low bounce.

2. Land in a prone position with arms and hands extended on mat.

3. Push off the mat using your arms and hands to return to upright position.

FUNDAMENTAL SKILLS

1. DO NOT attempt or allow somersaults. Landing on the head or neck can cause serious injury, paralysis, or death, even when landing on the middle of the bed.
2. Do not allow more than one person on the trampoline. Use by more than one person at the same time can result in serious injury.
3. Use trampoline only with mature, knowledgeable supervision at all times.
4. Inspect the trampoline before each use. Make sure the frame padding is correctly and securely positioned. Replace any worn, defective, or missing parts.
5. Climb on and off the trampoline. It is a dangerous practice to jump from the trampoline to the floor or ground. when dismounting, or to jump onto the trampoline when mounting. Do not use the trampoline as a springboard to other objects.
6. Stop bounce by flexing knees as feet come in contact with the trampoline bed. Learn this skill before attempting others.
7. Learn fundamental bounces and body positions thoroughly before trying more advanced skills. A variety of trampoline activities can be carried out by performing the basic fundamentals in various series and combinations, performing one fundamental after another, with or without feet bounces between them.
8. Avoid bouncing too high. Stay low until bounce control and repeated landing in the center of the trampoline can be accomplished. Control is more important than height.
9. While keeping the head erect, focus eyes on the trampoline toward the perimeter. This will help control bounce.
10. Avoid bouncing when tired. Keep turns short.
11. Properly secure the trampoline when not in use. Protect it against unauthorized use.
12. Keep objects away which could interfere with the performer. Maintain a clear area around the trampoline.
13. For additional information concerning the trampoline equipment, contact SkyBound (www.SkyBoundUSA.com).
14. For information concerning skill training, contact a certified trampoline instructor.
15. Bounce only when the surface of the bed is dry. Wind or air movement should be calm to gentle. The trampoline must not be used in gusty or severe winds.

skybound